PHYSICS 11

CIRCUIT ELECTRICITY

1.

Consider the circuit element shown below.

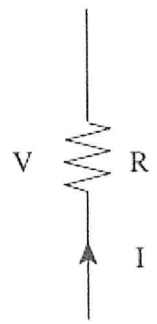

The voltage across the resistor increases from V to 2V. The resistance remains the same. By what factor has the current changed?

A. $\frac{1}{4}$

B. $\frac{1}{2}$

C. 2

D. 4

2.

A 12.0 V power supply is connected to 4 resistors as shown.

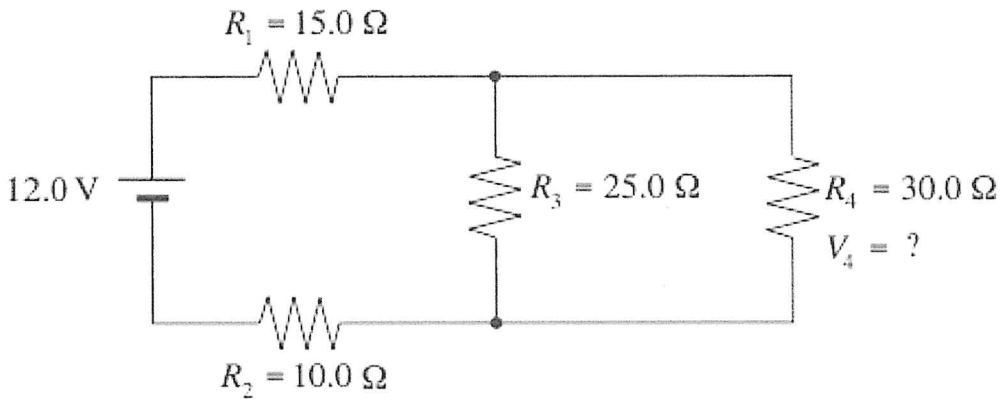

What is the potential difference, V_4, across the $30.0\ \Omega$ resistor?

A. 2.12 V
B. 4.24 V
C. 9.32 V
D. 12.0 V

3.

An electric motor is being supplied with 500 W of power at 120 V. The resistance of the motor is 8.0 Ω. What current is being supplied to the motor?

A. 4.2 A
B. 7.9 A
C. 15 A
D. 63 A

4.

A circuit junction is shown below.

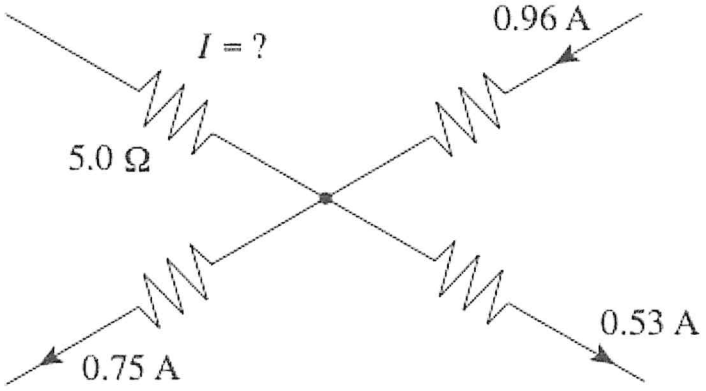

What is the current and its direction through the 5.0 Ω resistor?

	CURRENT	DIRECTION
A.	0.32 A	away from junction
B.	0.32 A	towards the junction
C.	2.24 A	away from junction
D.	2.24 A	towards the junction

5.

A power source is providing a constant voltage, V, to the circuit shown below.

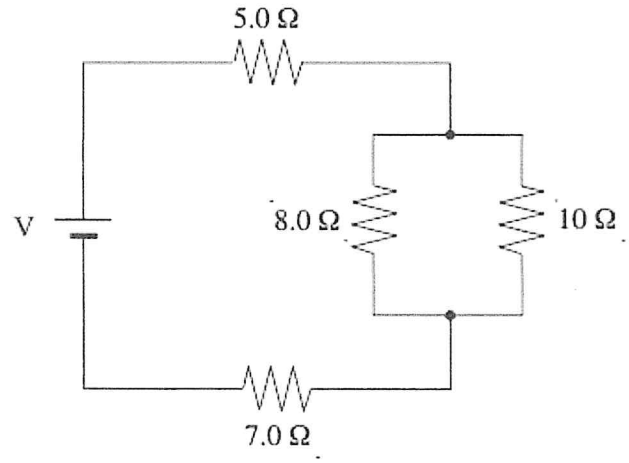

If the 8.0 Ω resistor is removed from the circuit what happens to the equivalent resistance of the circuit and the current through the 7.0 Ω resistor?

	EQUIVALENT RESISTANCE OF THE CIRCUIT	CURRENT THROUGH 7.0 Ω RESISTOR
A.	Increases	Decreases
B.	Decreases	Increases
C.	Increases	Increases
D.	Decreases	Decreases

6.

In an electric circuit, 6.25×10^{18} electrons flow past one point in 0.10 s. What is the current?

A. 1.6×10^{-19} A

B. 1.0 A

C. 10 A

D. 6.25×10^{19} A

7.

Three identical light bulbs are placed in a circuit as shown.

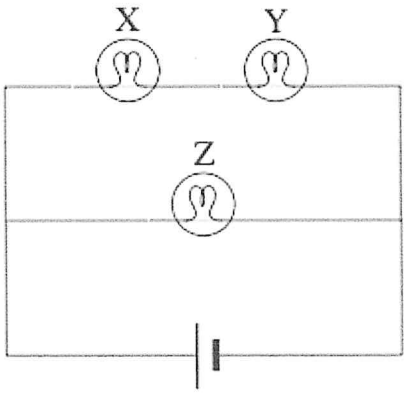

Which of the following is correct?

A. The voltage and current are the same for all three bulbs.
B. The current in light bulb Z is less than the current in light bulb X.
C. The current in light bulb Z is greater than the current in light bulb Y.
D. The voltage across light bulb Z is less than the voltage across light bulb X.

8.

What current would be drawn from the power supply in the circuit shown below?

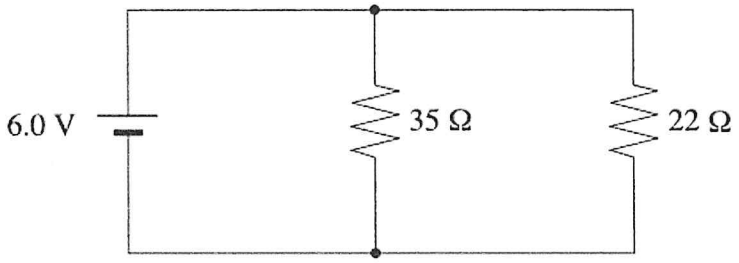

A. 0.11 A
B. 0.17 A
C. 0.27 A
D. 0.44 A

9.

A student needs to connect a voltmeter to measure the potential difference across the parallel resistors in the circuit shown below.

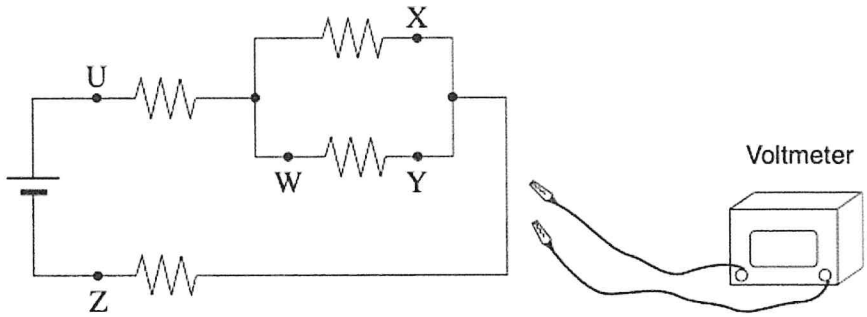

Across which two connection points should the student connect the voltmeter?

A. U and Z
B. X and Y
C. X and W
D. W and Z

10.

What is the current I through the $10.0\ \Omega$ resistor in the circuit shown below?

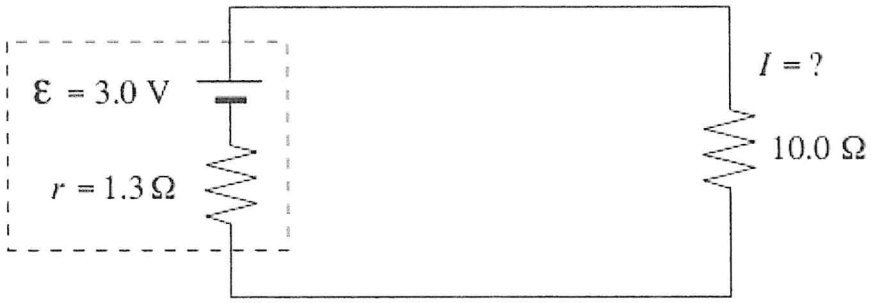

A. 0.27 A
B. 0.30 A
C. 0.34 A
D. 2.3 A

11.

. What power is dissipated by the 15 Ω resistor in the circuit shown?

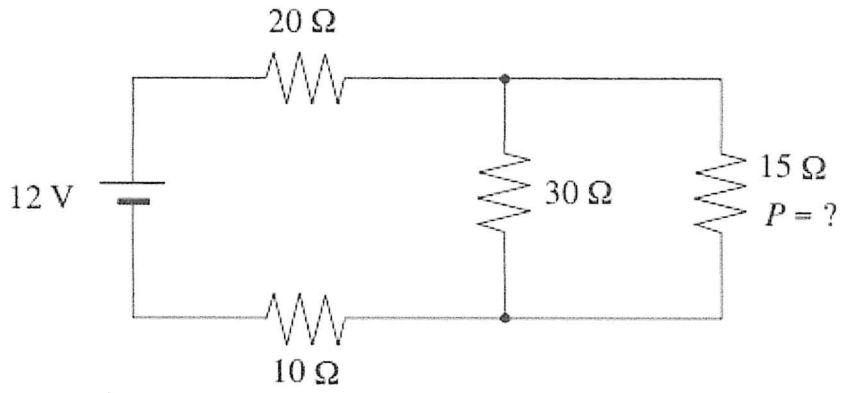

A. 0.60 W
B. 1.4 W
C. 6.7 W
D. 15 W

12.

What is the terminal voltage of the battery in the circuit shown?

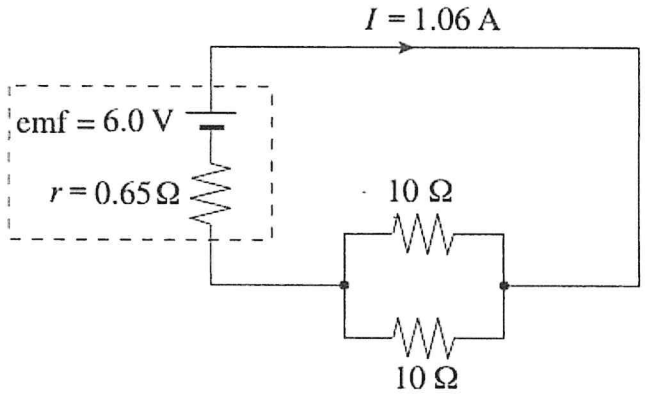

A. 0.69 V
B. 5.3 V
C. 6.0 V
D. 6.7 V